N Female Bulkhead to BNC Female Bulkhead Cable Assembly using RG58 Coax, 4 FT

LCCA30690-FT4

Configuration

- Connector 1: N Female Bulkhead
- Connector 2: BNC Female Bulkhead
- Cable Type: RG58

Features

- 50 Ohm RF (Radio Frequency) Transmission
- RG58 stranded center conductor enhances flexibility
- Same day shipping available
- Bulkhead design is ideal for panel mount applications
- Heat shrink strain relief for a highly durable RF cable assembly

Applications

- RFID systems up to 1 GHz
- General Purpose Test and Measurements
- Wireless Infrastructure
- GPS Timing and telematics

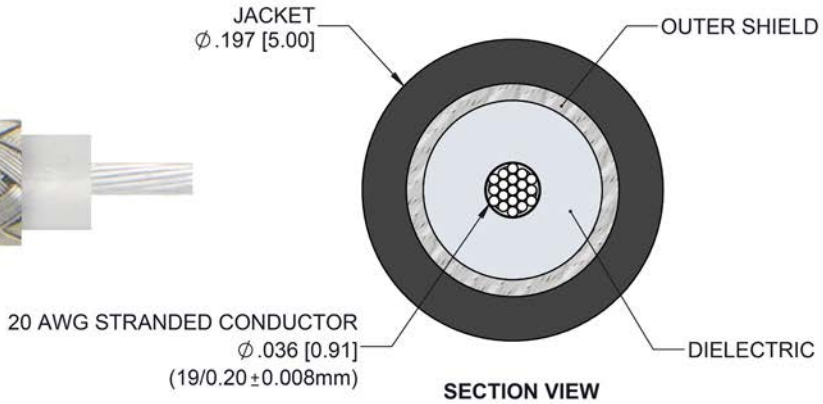

Description

L-com's LCCA30690-FT4 is a N female bulkhead to BNC female bulkhead cable assembly using RG58 coax, 4 FT and ships same-day. The RG58 coax of this N cable uses the PTFE dielectric with a VoP of 69.5%. These flexible RF cable assemblies are ideal for applications where flexure is required. Our L-com N to BNC cable assembly has a female to female gender configuration with flexible RG58 series coax and operates to 1 GHz. The shielding of this N cable is comprised of tinned copper braid. L-com's RF cable assembly with N bulkhead interface enables system designers to have external connections on their product enclosures or to be used for other rack mount and panel mount applications.

Custom versions of this N female to N female cable, along with the rest of L-com's other RF assemblies, can also be built and shipped same day. Other available RF cable assembly value added services from L-com include connector orientation or clocking, heat shrink booting and custom labeling. RF testing can also be performed to document the electrical performance of your cable assembly. Contact a sales representative for testing or custom RF cable quotes. Part number LCCA30690-FT4 L-com N Female Bulkhead to BNC Female Bulkhead Cable Assembly using RG58 Coax, 4 FT data sheet PDF includes details of the RF product specifications, CAD drawing(s) and dimensions below.

Electrical Specifications

Description	Minimum	Typical	Maximum	Units

LCCA30690-FT4 REV 1 | © 2020 Infinite Electronics, Inc. L-com is a registered trademark of Infinite Electronics, Inc.

N Female Bulkhead to BNC Female Bulkhead Cable Assembly using RG58 Coax, 4 FT

LCCA30690-FT4

Frequency Range	DC		1,000	MHz
VSWR			1.4:1	
Velocity of Propagation		69.5		%
Capacitance		16.1 [52.82]		pF/ft [pF/m]

Specifications by Frequency

Description	F1	F2	F3	F4	F5	Units
Frequency	50	100	200	400	1,000	MHz
Insertion Loss (Typ.)	0.33	0.4	0.5	0.66	1.06	dB

Electrical Specification Notes:

The Insertion Loss data above is based on the performance specifications of the coax cable and connectors used in this assembly. The Insertion Loss includes an estimated insertion loss of 0.1 dB per connector.

Mechanical Specifications

Cable Assembly

Length	48 in [121.92 cm]

Cable

Cable Type	RG58
Impedance	50 Ohms
Inner Conductor Type	Stranded
Inner Conductor Material and Plating	Copper, Silver
Dielectric Type	PTFE
Number of Shields	1
Shield Layer 1	Tinned Copper Braid
Jacket Material	PVC, Black
Jacket Diameter	0.197 in [5 mm]
Repeated Minimum Bend Radius	2 in [50.8 mm]

LCCA30690-FT4 REV 1 | © 2020 Infinite Electronics, Inc. L-com is a registered trademark of Infinite Electronics, Inc.

USA & Canada **+1(800) 341-5266** | International **+1(978) 682-6936** | **l-com.com**

N Female Bulkhead to BNC Female Bulkhead Cable Assembly using RG58 Coax, 4 FT

LCCA30690-FT4

Connectors

Description	Connector 1	Connector 2
Type	N Female Bulkhead	BNC Female Bulkhead
Impedance	50 Ohms	50 Ohms
Contact Material and Plating	Phosphor Bronze, Gold	Brass, Gold
Dielectric Type	PTFE	Delrin
Outer Conductor Material and Plating	Brass, Nickel	Brass, Nickel
Body Material and Plating	Brass, Nickel	Brass, Nickel

Environmental Specifications

Temperature

Operating Range -20 to +80 deg C

Compliance Certifications (see product page for current document)

Plotted and Other Data

Notes:

LCCA30690-FT4 REV 1 | © 2020 Infinite Electronics, Inc. L-com is a registered trademark of Infinite Electronics, Inc.

N Female Bulkhead to BNC Female Bulkhead Cable Assembly using RG58 Coax, 4 FT

LCCA30690-FT4

How to Order

Part Number Configuration: **LCCA30690 - xx uu**

- **uu** — Unit of Measure:
  - cm = Centimeters
  - <blank> = Inches
- **xx** — Length
- **LCCA30690** — Base Number

Example: LCCA30690-12 = 12 inches long cable
LCCA30690-100cm = 100 cm long cable

N Female Bulkhead to BNC Female Bulkhead Cable Assembly using RG58 Coax, 4 FT from L-com has same day shipment for domestic and International orders. L-com is a leading manufacturer of wired and wireless connectivity products and committed to in-stock availability and same day shipping. Our portfolio includes coaxial cable assemblies, connectors, adapters and custom products as well as lightning and surge protectors, NEMA rated enclosures, and an RF product line which includes antennas, amplifiers, passive, and active components.

The information contained within this document is accurate to the best of our knowledge and representative of the part described herein. It may be necessary to make modifications to the part and/or the documentation of the part in order to impliment improvements. L-com reserves the right to make such changes as required. Unless otherwise stated, all specifications are nominal. L-com does not make any representation or warranty regarding the suitability of the part described herein for any particular purpose, and L-com does not assume liability arising out of the use of any part or document.ontained within this document is accurate to the best of our knowledge and representative of the part described herein. It may be necessary to make modifications to the part and/or the documentation of the part in order to impliment improvements. L-com reserves the right to make such changes as required. Unless otherwise stated, all specifications are nominal. L-com does not make any representation or warranty regarding the suitability of the part described herein for any particular purpose, and L-com does not assume liability arising out of the use of any part or document.

LCCA30690-FT4 REV 1 | © 2020 Infinite Electronics, Inc. L-com is a registered trademark of Infinite Electronics, Inc.
USA & Canada **+1(800) 341-5266** | International **+1(978) 682-6936** | **l-com.com**

L-com CAD Drawing

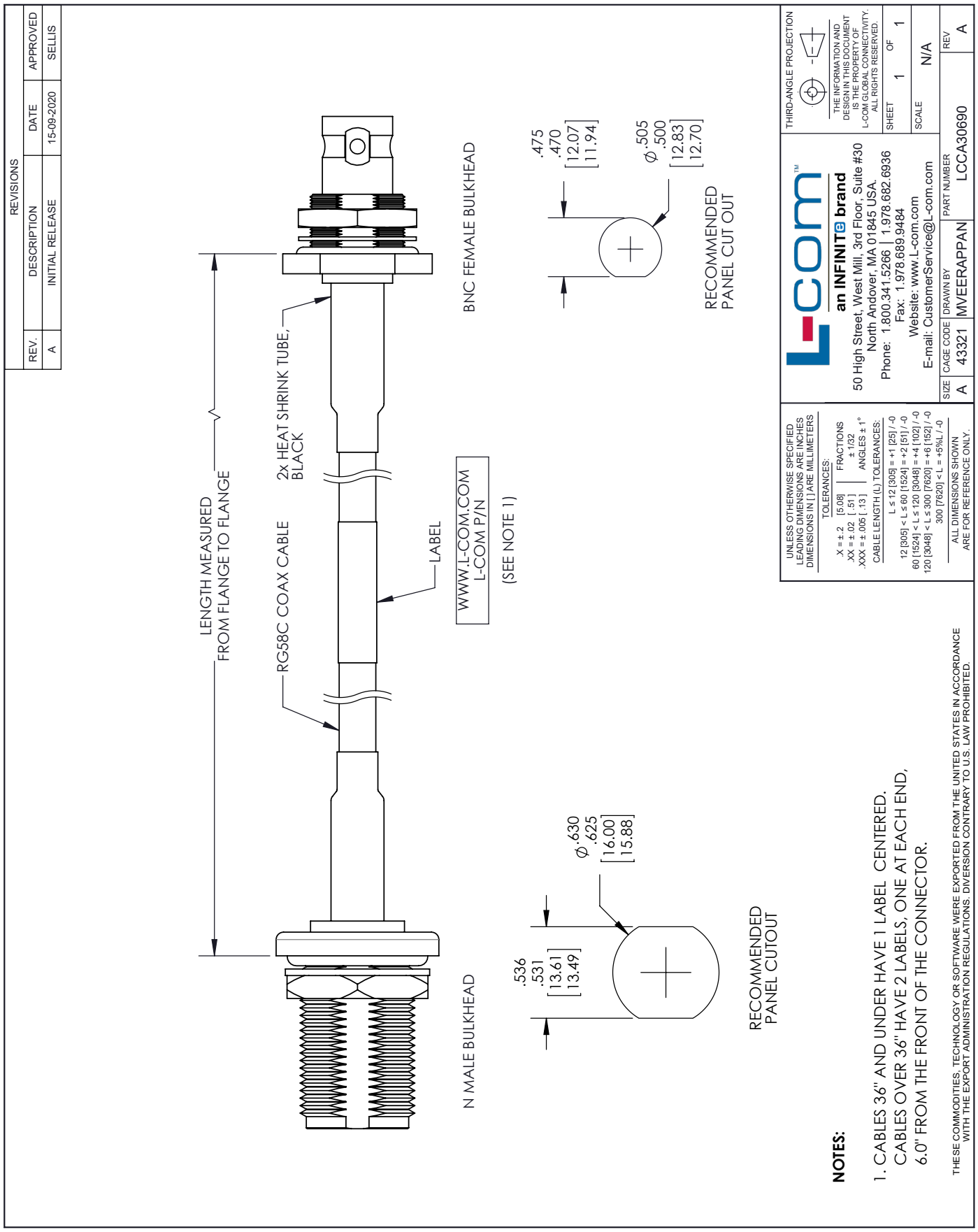

LCCA30690-FT4 REV 1 | © 2020 Infinite Electronics, Inc. L-com is a registered trademark of Infinite Electronics, Inc.