REVISION					
ZONE	REV	DESCRIPTION	DATE	CHANGED BY	APPROVED
	A	INITIAL RELEASE	07/14/2025	DMAY	DGUTTADAURO

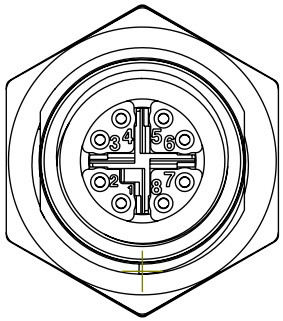

CONN.
PIN ASSIGNMENT
FRONT VIEW

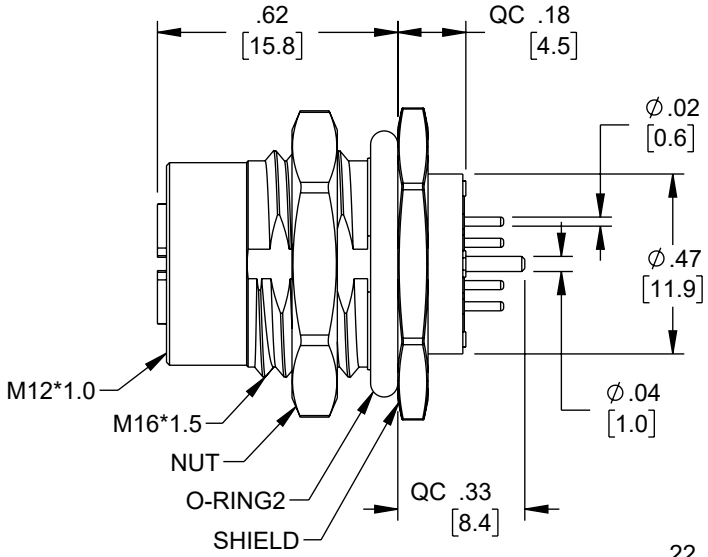

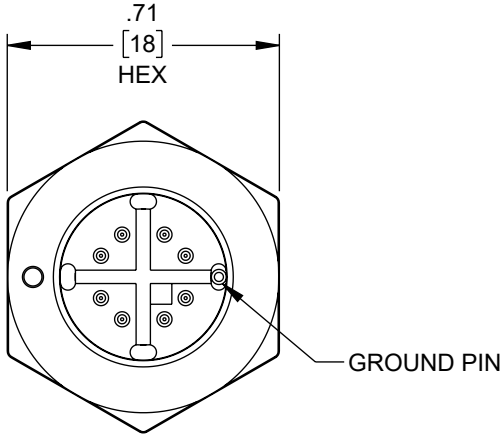

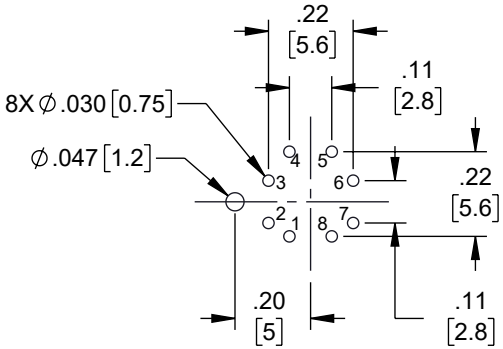

RECOMMENDED
PCB LAYOUT

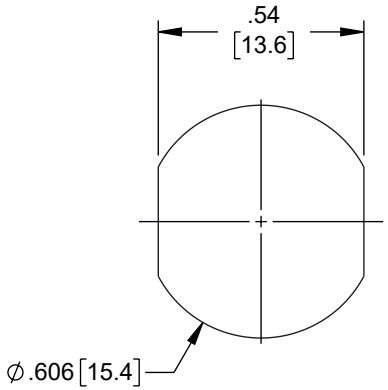

RECOMMENDED
PANEL CUT-OUT

NOTES:

1. QC IMPORTANT DIMENSION.
2. WATERPROOF RATE: IP67, UNMATED
3. CONNECTOR: THERMOPLASTIC, BLACK
4. FEMALE PIN: COPPER ALLOY, GOLD PLATED
5. SHIELD: COPPER ALLOY, NICKEL PLATED
6. SCREW NUT: METAL, NICKEL PLATED
7. O-RING: RUBBER, GRAY
8. O-RING2: RUBBER, BLACK
9. FOR PANEL THICKNESS RANGE: 2.0 ~ 3.0mm
10. FOR PCB THICKNESS MAX. 1.6mm
11. ASSEMBLE NUT ON CONNECTOR
12. TEMPERATURE RANGE: -40°C TO +105°C
13. OPERATING VOLTAGE: 50V AC / 60V DC
14. RATED CURRENT @40°C: 0.5A
15. COMPONENT SHALL BE INDIVIDUALLY PACKAGED

REGULATORY COMPLIANCE:
EU RoHS DIRECTIVE (MOST RECENT RELEASED VERSION).

THE INFORMATION CONTAINED IN THIS DRAWING IS THE SOLE PROPERTY OF INFINITE ELECTRONICS, INC. ANY REPRODUCTION IN PART OR WHOLE WITHOUT THE WRITTEN PERMISSION OF INFINITE ELECTRONICS, INC. IS PROHIBITED. THESE COMMODITIES, TECHNOLOGY OR SOFTWARE WERE EXPORTED FROM THE UNITED STATES IN ACCORDANCE WITH THE EXPORT ADMINISTRATION REGULATIONS. DIVERSION CONTRARY TO U.S. LAW PROHIBITED.

UNLESS OTHERWISE SPECIFIED
LEADING DIMENSIONS ARE INCHES
DIMENSIONS IN [ ] ARE MILLIMETERS

TOLERANCES:

.X = ±.2 [5]	FRACTIONS
.XX = ±.02 [0.5]	± 1/32
.XXX = ±.005 [0.13]	ANGLES ± 1°

CABLE LENGTH TOLERANCES:
≤12 [305] = +1 [25] / -0
>12 [305] ≤ 60 [1524] = +2 [51] / -0
>60 [1524] ≤ 120 [3048] = +4 [102] / -0
>120 [3048] ≤ 300 [7620] = +6 [152] / -0
>300 [7620] = +5% / -0

ALL DIMENSIONS ARE FOR REFERENCE ONLY AND SUBJECT TO CHANGE WITHOUT NOTICE.
UN-DIMENSIONED/NON-CRITICAL FEATURES MAY VARY IN SIZE AND LOCATION
COLORS MAY VARY

L-com®
an INFINITE brand
Website: www.L-com.com
Phone: 1.800.341.5266 | 1.978.682.6936

INTERPRET ALL DIMENSIONS AND TOLERANCES PER ASME Y14.5

SCALE	SHEET
NONE	1 OF 1

DESCRIPTION
M12 SHIELDED PANEL MOUNT CONNECTOR, IP67 8 POSITION X-CODE FEMALE RECEPTACLE, PCB SOLDER, M16 FRONT MOUNTING STYLE

SIZE	CAGE CODE	DRAWN BY	ITEM NO.	REV
A	43321	DMAY	M12PCB-8XF-M16F	A

LC LG Rev-D5 Asize