REVISION					
ZONE	REV	DESCRIPTION	DATE	CHANGED BY	APPROVED
	A	INITIAL RELEASE	07/21/2025	DMAY	DGUTTADAURO

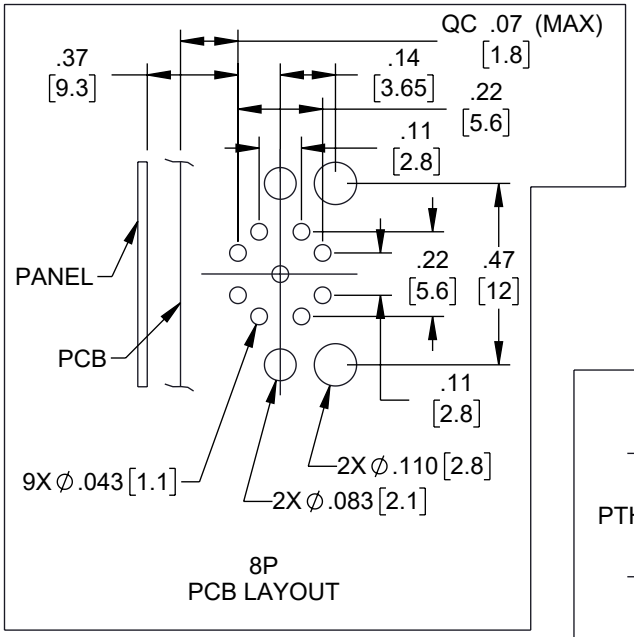

8P
PCB LAYOUT

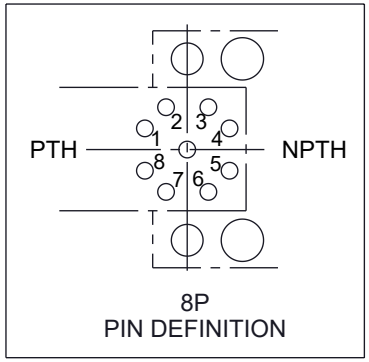

8P
PIN DEFINITION

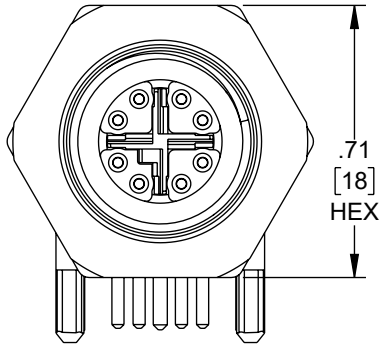

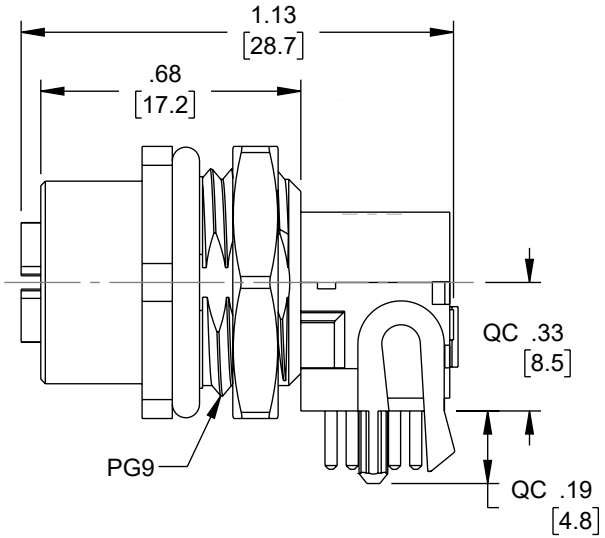

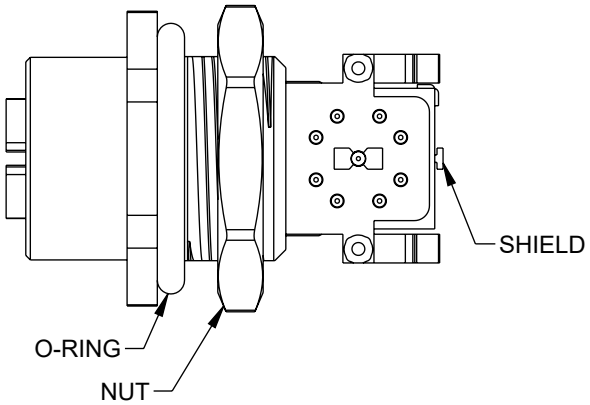

NOTES:

1. QC IMPORTANT DIMENSION.
2. WATERPROOF RATE: IP67, MATED
3. CONNECTOR: THERMOPLASTIC, BLACK
4. PIN: COPPER ALLOY, GOLD PLATED
5. SHIELD: METAL
6. NUT: METAL
7. GASKET: RUBBER, BLACK
8. O-RING: RUBBER, BLACK
9. FOR PANEL THICKNESS: 0.6 ~ 3.0mm
10. FOR PCB THICKNESS: 1.6 ~ 2.4mm
11. ASSEMBLE NUT ON CONNECTOR
12. TEMPERATURE RANGE: -40°C TO +105°C
13. OPERATING VOLTAGE: 50V AC / 60V DC
14. RATED CURRENT @40°C: 0.5A
15. COMPONENT SHALL BE INDIVIDUALLY PACKAGED

REGULATORY COMPLIANCE:
EU RoHS DIRECTIVE (MOST RECENT RELEASED VERSION).

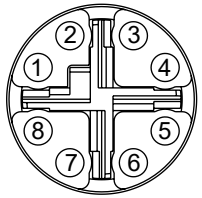

8P
PIN ASSIGNMENT
FRONT VIEW

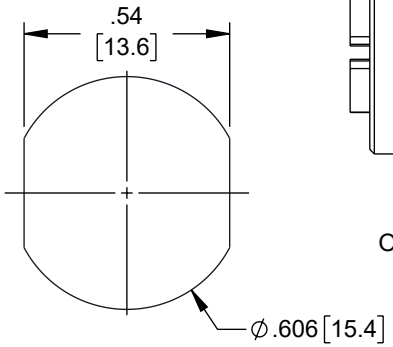

RECOMMENDED
PANEL CUT-OUT

UNLESS OTHERWISE SPECIFIED
LEADING DIMENSIONS ARE INCHES
DIMENSIONS IN [ ] ARE MILLIMETERS

TOLERANCES:

.X = ±.2 [5]	FRACTIONS
.XX = ±.02 [0.5]	± 1/32
.XXX = ±.005 [0.13]	ANGLES ± 1°

CABLE LENGTH TOLERANCES:
≤12 [305] = +1 [25] / -0
>12 [305] ≤ 60 [1524] = +2 [51] / -0
>60 [1524] ≤ 120 [3048] = +4 [102] / -0
>120 [3048] ≤ 300 [7620] = +6 [152] / -0
>300 [7620] = +5% / -0

ALL DIMENSIONS ARE FOR REFERENCE ONLY AND SUBJECT TO CHANGE WITHOUT NOTICE.
UN-DIMENSIONED/NON-CRITICAL FEATURES MAY VARY IN SIZE AND LOCATION
COLORS MAY VARY

L-com®
an INFINITE brand
Website: www.L-com.com
Phone: 1.800.341.5266 | 1.978.682.6936

INTERPRET ALL DIMENSIONS AND TOLERANCES PER ASME Y14.5

SCALE	SHEET
NONE	1 OF 1

DESCRIPTION
M12 SHIELDED PANEL MOUNT CONNECTOR, IP67 8 POSITION X-CODE FEMALE RECEPTACLE, RIGHT ANGLE PCB SOLDER, PG9 REAR MOUNTING STYLE

SIZE	CAGE CODE	DRAWN BY	ITEM NO.	REV
A	43321	DMAY	M1290PCB-8XF-PG9R	A

THE INFORMATION CONTAINED IN THIS DRAWING IS THE SOLE PROPERTY OF INFINITE ELECTRONICS, INC. ANY REPRODUCTION IN PART OR WHOLE WITHOUT THE WRITTEN PERMISSION OF INFINITE ELECTRONICS, INC. IS PROHIBITED. THESE COMMODITIES, TECHNOLOGY OR SOFTWARE WERE EXPORTED FROM THE UNITED STATES IN ACCORDANCE WITH THE EXPORT ADMINISTRATION REGULATIONS. DIVERSION CONTRARY TO U.S. LAW PROHIBITED.

LC LG Rev-D5 Asize