MATERIALS	
BODY	NICKEL PLATED BRASS
CONTACT	GOLD PLATED BRASS
INSULATOR	PTFE

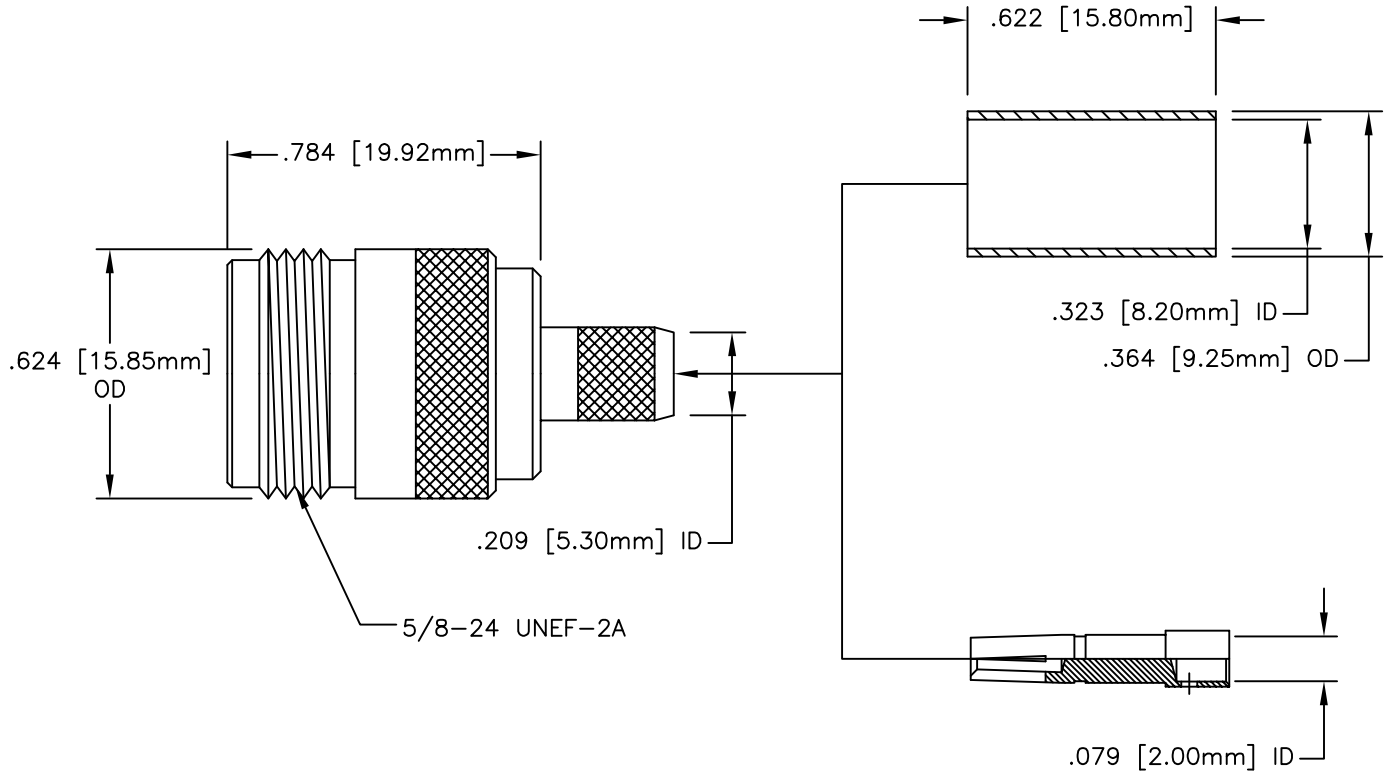

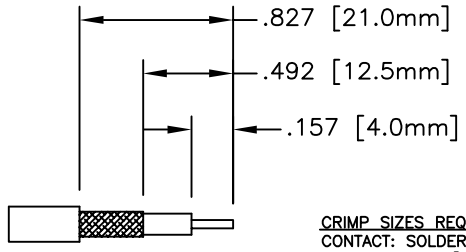

STRIPPING DIMENSIONS

CRIMP SIZES REQUIRED
CONTACT: SOLDER
FERRULE: .320 [8.1] HEX CRIMP TOOL

NOTES:
1. UNLESS OTHERWISE SPECIFIED ALL DIMENSIONS ARE NOMINAL.
2. ALL SPECIFICATIONS ARE SUBJECT TO CHANGE WITHOUT NOTICE AT ANY TIME.

REV	ECN No.	DATE	DESCRIPTION
B	–	11/28/07	Updated Dwg

SIZE: A

TITLE: N-FEMALE CRIMP CONNECTOR FOR 300-SERIES CABLE

DRAWN BY	K.Burgner	11/28/07	DRAWING No. ANF-1304 REV B
ORIGINATOR	K.Burgner	11/28/07	
APPROVAL	K.Burgner	11/28/07	PART No. ANF-1304
SCALE 3:1	SHEET 1/1	MATERIAL ---	FILE No. ANF-1304

L-com Global Connectivity

Website: www.L-com.com
Tel: 1-800-343-1455
Copyright© 2009 L-com, Inc.
All rights reserved.