L-com® Global Connectivity

DATASHEET
DisplayPort

DisplayPort, the new standard in digital interface technology, delivers a true digital experience to all PCs and monitors by making more efficient use of available bandwidth and delivering a more robust signal. DisplayPort supports the latest graphics and LCD technologies to vastly improve picture brightness and make device to device connections easier than ever before. The result is a vastly improved viewing experience on both computer monitors and home theatre systems. Unlike devices configured with LVDS, DVI or VGA ports, DisplayPort ready devices can deliver high-definition audio and video paths through a single cable. That means greater signal integrity and a better picture. And the picture quality can be maintained over longer cable lengths than ever before.

ADP-DVI-MF

ADP-HDMI-MF

L-com's DPCA Series of DisplayPort cables. More information can be found at www.L-com.com.

In April of 2008 L-com was accepted as a member of the Video Electronics Standards Association (VESA). VESA is an organization that supports and sets industry-wide interface standards for the PC, workstation and consumer electronics industries. VESA promotes and develops timely, relevant, open standards for the display and display interface industry, ensuring interoperability and encouraging innovation and market growth. By attaining membership status L-com can now work on helping to define new standards and interfaces as well as being engaged in the latest new technologies.

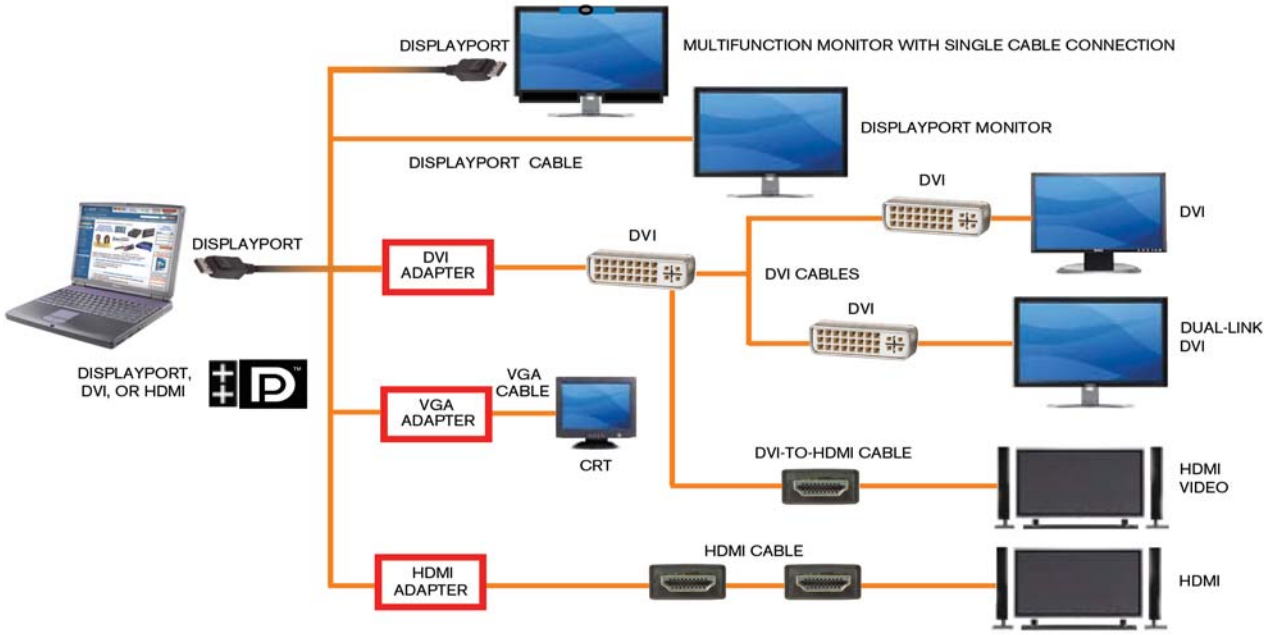

Item #	Description
DPCAMM-( )M	DisplayPort to DisplayPort Cable, 7 GHz, 1, 2, 3, 4,m ..... ***IN STOCK!***
DPCAZMM-( )M	DisplayPort to DisplayPort, Low Smoke Zero Halogen Cable, 7 GHz, 1, 2, 3, 4,m ..... ***IN STOCK!***
ADP-DVID-MF	DisplayPort Male to DVI-D Female Adapter Cable, 6" ..... ***IN STOCK!***
ADP-HDMID-MF	DisplayPort Male to HDMI Female Adapter Cable, 6" ..... ***IN STOCK!***
ADP-HD15D-MF	DisplayPort Male to HD15 Female Adapter Cable, 6" ..... ***IN STOCK!***
ADP-DVI-MF	DisplayPort Male to DVI Female Adapter ..... ***IN STOCK!***
ADP-HDMI-MF	DisplayPort Male to HDMI Female Adapter ..... ***IN STOCK!***

L-com's Certifications

UL - Processed Wire

UL - Computer Interconnection Cable Assemblies

UL - Repackaged Electrical Construction Equipment

ISO 9001: 2000

GSA Contract Holder #GS-35F-0174S

L-com Global Connectivity
45 Beechwood Drive
North Andover, MA 01845
Call Toll Free 1-888-209-2782
Fax: 978-689-9484
sales@L-com.com
www.L-com.com

© L-com, Inc. All Rights Reserved. L-com Global Connectivity and the L-com logo are registered marks.