## Lightning / Surge Protectors Tutorial

A single bolt of lightning carrying up to 100 million volts of electricity has the power to rip through roofs, explode walls of brick and destroy electronic networking/communications equipment as well as industrial equipment. Don't be fooled into a false sense of security if you never receive direct strikes. Indirect lightning strikes on telephone and power lines can be just as catastrophic!

### What are Lightning and Surge Protectors?

Lightning and surge protectors are devices whose purpose is to eliminate transients on a conductor which are induced by nearby lightning activity. They are used to prevent damage to valuable electronic equipment from these high-voltage surges and spikes.

### How are Lightning and Surge Protectors used?

A lightning and surge protector is used inline between devices such as antennas and amplifiers and radios or between connections on Ethernet switches and routers. They are connected via copper cabling (Coaxial, UTP etc.).

### Where are Lightning and Surge Protectors used?

Lightning and surge protectors are used in many different applications including outdoor wireless networks, indoor Ethernet network installations and in any instance where the potential for a power surge could damage or destroy communications equipment. They can also be used to protect video equipment which utilizes outdoor mounted PoE cameras.

### Coaxial Lightning and Surge Protectors

L-com's HyperLink™ coaxial lightning and surge protectors are available in two types, Quarter Wave and Gas Discharge models.

Quarter Wave coaxial protectors are designed to pass the desired frequency while suppressing lightning surges, much like a signal filter. Lightning strike electrical surges which operate at low frequencies are diverted through the protector's short-circuit to the ground.

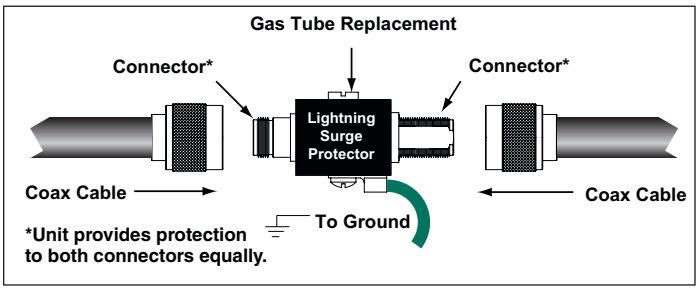


Gas Discharge coaxial protectors are a type of lightning arrestor which employs a replaceable gas discharge tube, which is a component containing a small amount of gas. The gas tube dumps extremely high amounts of surge energy directly to the ground of the protector. HyperLink™ coaxial lightning protectors are available for 0-3 GHz operation or 0-6 GHz operation.

### Data Line Lightning and Surge Protectors

The use of surge protectors to protect sensitive equipment from lightning strikes and surges on Ethernet data lines has become more important than ever with the advent of faster standards like 100 and 1000 Base-T Ethernet. The faster data speeds have required equipment manufacturers to use fragile high speed components.

Designed for CAT5, CAT5E and CAT6 applications, L-com's HyperLink™ data line protectors are available in different power levels. From low power models for typical hub or client installations to high-power, 3-stage protectors designed for maximum surge protection.

In addition to our data line protectors, we offer protectors for Telephone, DSL, T1, RS-422/485, RS-232, 4-20 mA Current Loop, AC/DC and Video applications.

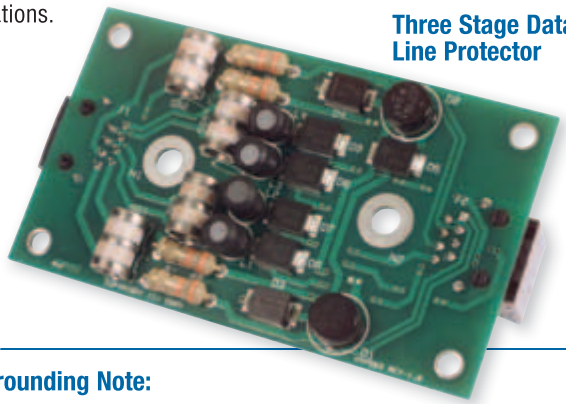

Three Stage Data Line Protector

### Outdoor Audio System Lightning and Surge Protectors

Lightning strikes on outdoor speakers can damage expensive home audio systems and public address systems. To reduce the risk of damage to these systems, we recommend one of our audio system protectors. These devices are placed between the audio amplifier and the outdoor speakers.

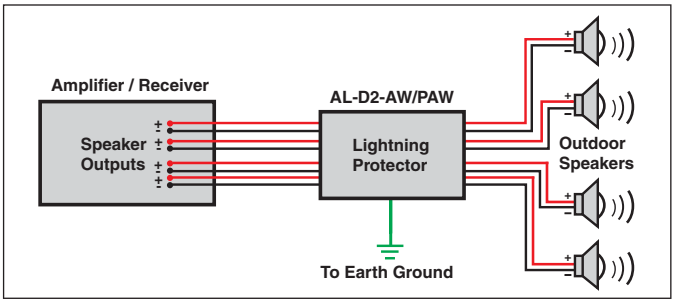


### Grounding Note:

Proper grounding of lightning and surge protectors is required to ensure proper operation. Connecting the ground lug on the protectors to an earth ground is the recommended method. Please refer to the National Electric Code (or your local codes) for additional information or contact a licensed electrician for assistance.

L-com® Global Connectivity

For more useful information go to.... L-com.com/Resources



Shop at L-com.com or call 1-800-343-1455 • E-mail: sales@L-com.com • Fax: 978-689-9484